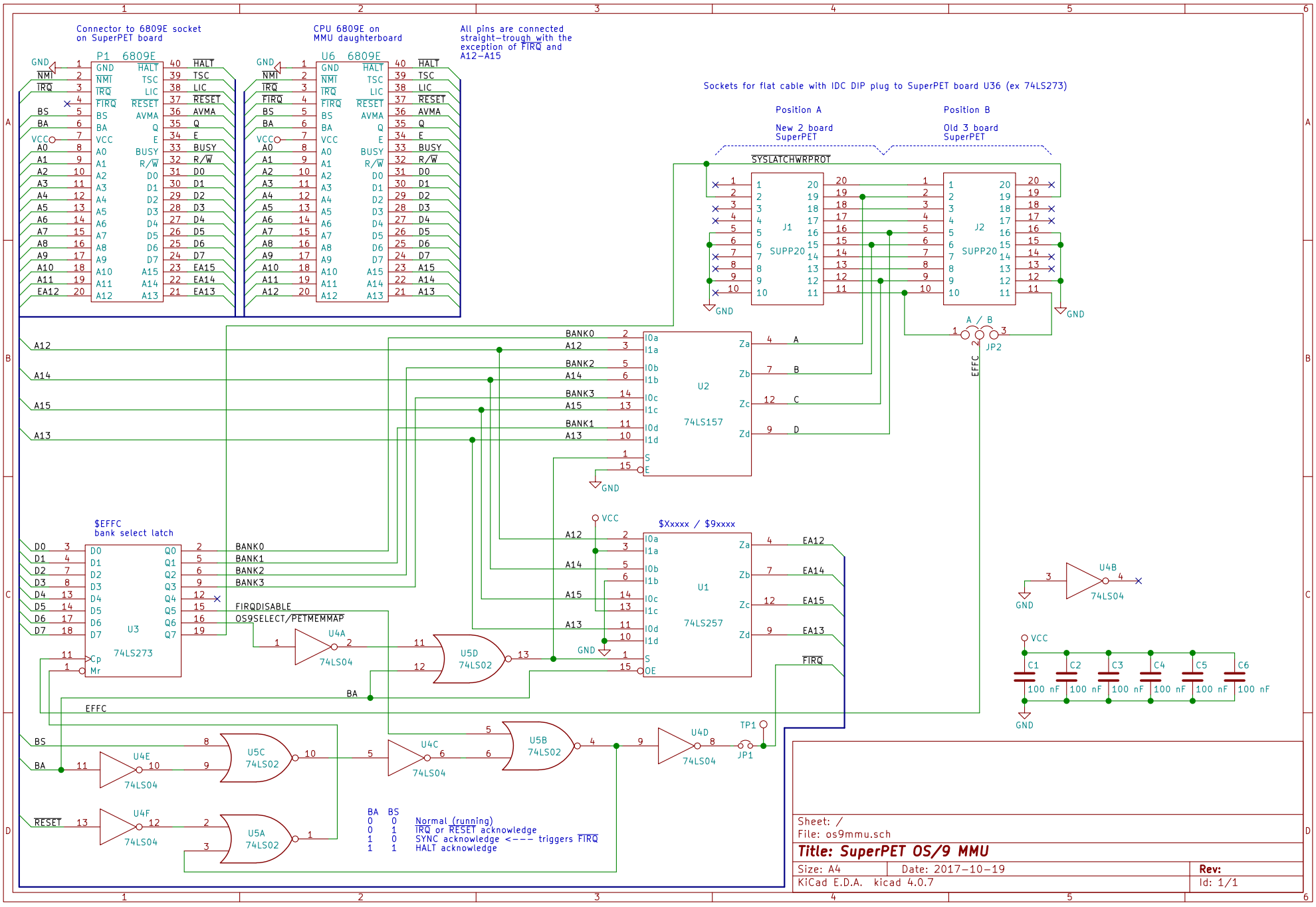
Connector to 6809E socket on SuperPET board
P1 6809E
CPU 6809E on MMU daughterboard
U6 6809E
All pins are connected straight-trough with the exception of FIRQ and A12-A15
Sockets for flat cable with IDC DIP plug to SuperPET board U36 (ex 74LS273)
Position A
New 2 board SuperPET
Position B
Old 3 board SuperPET
SYSLATCHWRPROT
J1 SUPP20
J2 SUPP20
A / B
JP2
EFFC
U2 74LS157
$EFFC bank select latch
U3 74LS273
$Xxxxx / $9xxxx
U1 74LS257
U4A 74LS04
U4B 74LS04
U4C 74LS04
U4D 74LS04
U4E 74LS04
U4F 74LS04
U5A 74LS02
U5B 74LS02
U5C 74LS02
U5D 74LS02
FIRQDISABLE
OS9SELECT/PETMEMMAP
C1 C2 C3 C4 C5 C6
100 nF
TP1
JP1
BA BS
0 0 Normal (running)
0 1 IRQ or RESET acknowledge
1 0 SYNC acknowledge <--- triggers FIRQ
1 1 HALT acknowledge
Sheet: /
File: os9mmu.sch
Title: SuperPET OS/9 MMU
Size: A4
Date: 2017-10-19
Rev:
KiCad E.D.A. kicad 4.0.7
Id: 1/1